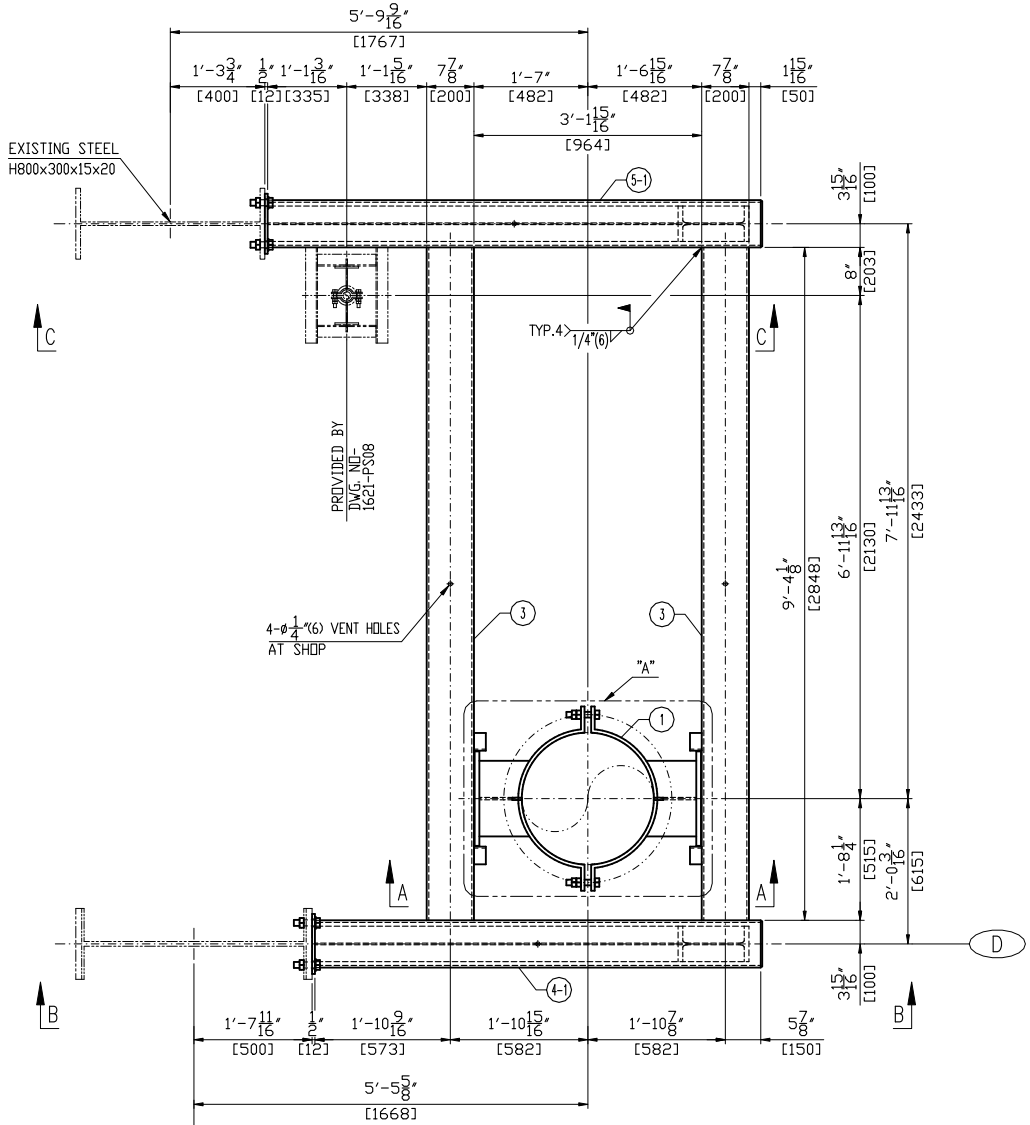

PLAN VIEW N

ISOMETRIC VIEW

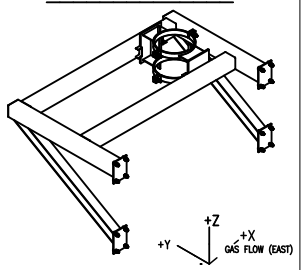

Revision History

Rev	Description	Date	Drawn / Checked By Approved By
–	INITIAL ISSUE	2026-01-21	Drawn J.B.HONG Checked By T.H.KIM Approved By B.L.CHOI

BILL OF MATERIAL — TOTAL WEIGHT : 1870.7 LB — SELECTION NO. 1503 — AREA LEFT

ITEM	DESCRIPTION	TYPE OR SIZE	LENGTH(mm)	LENGTH(IN)	QTY.	MATERIAL	WEIGHT(LB)/UNIT	WEIGHT(LB)/TOTAL	REMARK
1	PIPE CLAMP	PCSDC-550-479			1	A36		324.96	NOTE #2
2	CHANNEL	C150x75x6.5x10	50	1.97	4	A36	2.05	8.20	NOTE #3
3	SQUARE TUBE(1-I6)	ST200x200x9	2848	112.13	2	A500 Gr.B	328.38	656.76	NOTE #3
4-1	SQUARE TUBE(1-I6)	ST200x200x9	1887	74.29	1	A500 Gr.B		217.57	NOTE #3
4-2	H-BEAM	H150x150x7x10	2122	83.54	1	A36		147.36	NOTE #3
4-3	PLATE(4-I27-SLOT33-S)	PL12x254x356			2	A36	18.78	37.56	NOTE #3
4-4	COVER PLATE(4-R14)	PL6x191x191			1	A36		3.79	NOTE #3
5-1	SQUARE TUBE(1-I6)	ST200x200x9	2087	82.17	1	A500 Gr.B		240.63	NOTE #3
5-2	H-BEAM	H150x150x7x10	2352	92.60	1	A36		163.34	NOTE #3
5-3	PLATE(4-I27-SLOT33-S)	PL12x254x356			2	A36	18.78	37.56	NOTE #3
5-4	COVER PLATE(4-R14)	PL6x191x191			1	A36		3.79	NOTE #3
6	H.S.B/N/2PW	1"-8 UNC-3 1/2"			4	A325	1.70	6.80	NOTE #3
7	H.S.B/N/2PW	1"-8 UNC-3 1/4"			4	A325	1.65	6.60	NOTE #3
8	H.S.B/N/2PW	1"-8 UNC-3"			8	A325	1.63	13.04	NOTE #3

PIPING INFORMATION — PIPE SIZE (IN): 22 — PIPE MATERIAL: A335-P11 — ISO NO.: 1503 — OPER. TEMP (F): 744 — INSULATION (IN): 3

SUPPORT NUMBER	SUPPORT COORDINATES X	Y	Z	DESIGN LOADS (KIPS) X	Y	Z	DESIGN MOVEMENTS (IN) X	Y	Z
1503-PS01	61'-5 13/16'	24'-11 3/16'	54'-8 1/2'	±3.031	±3.877	-0.56	-0.12	0.12	-2.43
	18740	7600	16675						

"Z" UP, "Y" NORTH, "X" GAS FLOW EAST

NOTES:

1. PIPE SUPPORT SHOP ATTACHMENTS, GENERAL NOTES, WELD & PLATE DETAILS 1635572-D1S0-3800
2. THIS ITEM WILL BE SUPPLIED BY ENGINEERED PIPE SUPPORT SUPPLIER.
3. THIS ITEM WILL BE SUPPLIED BY STEEL SUPPORT FABRICATOR.
4. PIPE ATTACHMENTS THAT ARE SHOP WELDED ONTO THE PIPE ARE SUPPLIED BY THE PIPE FABRICATOR.
5. BILL OF MATERIAL SHOWN ARE FOR ONE (1) SUPPORT, THERE IS ONE (1) SUPPORT PER UNIT
6. REFER TO DRAWING 1635572-D2S0-3801~3804 FOR TYPICAL SHOP WELDED CONNECTION DETAILS NOT SPECIFIED ON THIS DRAWING.
7. FF* : 1 15/16(50)mm FIELD ADJUST
8. THIS ITEM WILL BE SUPPLIED BY CUSTOMER.

HANGER SETTING DATA(EACH)		TOTAL TRAVEL	- IN
SPRING LOAD	- KIPS	THERMAL MOVEMENT	- IN
HOT LOAD	- KIPS	SPRING RATE	- LB/IN
COLD LOAD	- KIPS	VARIABILITY	- %

UNIT NO.: 11

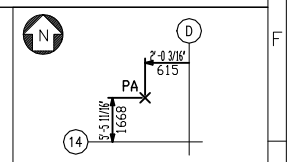

KEY PLAN

Similar To:	Created By:		MLI No.
NONE	SEONGHWA		NONE
First Made For:	Checked By:	Approved By:	IEC61355 No.
1635572	VIMAL.V	Kim, Chunrae	MTC
	Document Type: DETAIL DRAWING		Sheet Size A2
	Document Title: PIPE SUPPORT FOR CRH STEAM		
Creation Date 2026-01-21	Drawing No. 1635572-1503-PS01	Revision –	Sheet 1 OF 3

GE VERNOVA

THIRD ANGLE PROJECTION

NLR
Copyright© GE Vernova and/or its affiliates 2026
All rights reserved. The information herein is proprietary information of GE Vernova and/or its affiliates. Thus, it is being provided with the explicit expectation of restricted use. All persons or legal entities receiving this information shall be deemed by the act of its receipt to have contractually agreed to make no duplications, reproductions of any nature by any means, modifications, disclosures, or use use any portion of this material; except as is expressly authorized in writing by GE Vernova and/or its affiliates.

ITEM	DESCRIPTION	TYPE OR SIZE	LENGTH(mm)	LENGTH(IN)	QTY.	MATERIAL	WEIGHT(LB)/UNIT	WEIGHT(LB)/TOTAL	REMARK
9	LUG PLATE	PL10x40x100			4	A387-11	0.69	2.76	NOTE #4

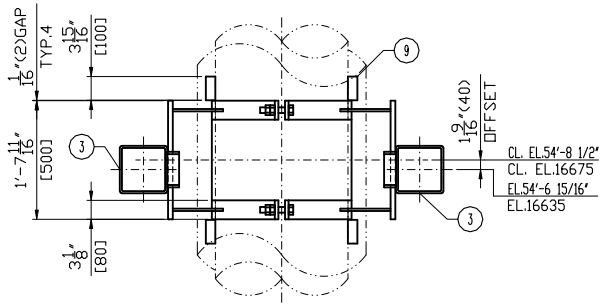

SECTION A-A
LOOKING WEST

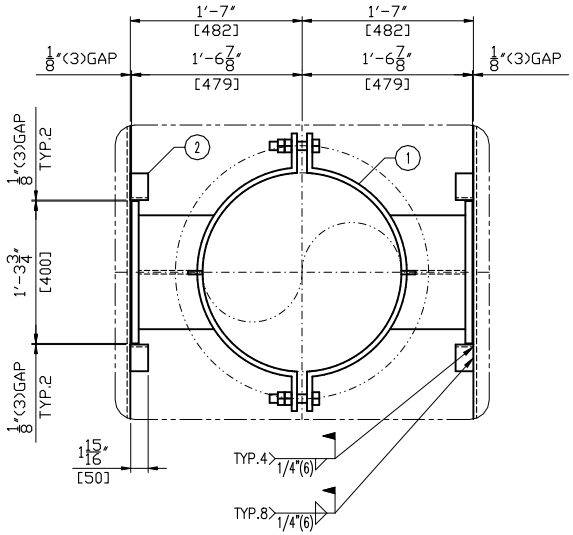

DETAIL "A"

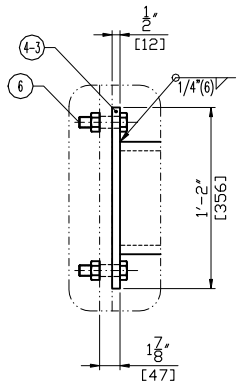

DETAIL "B"

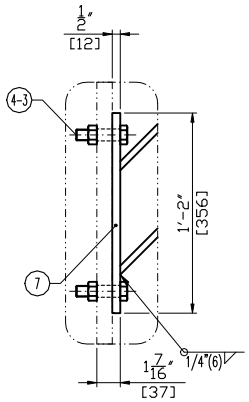

DETAIL "C"

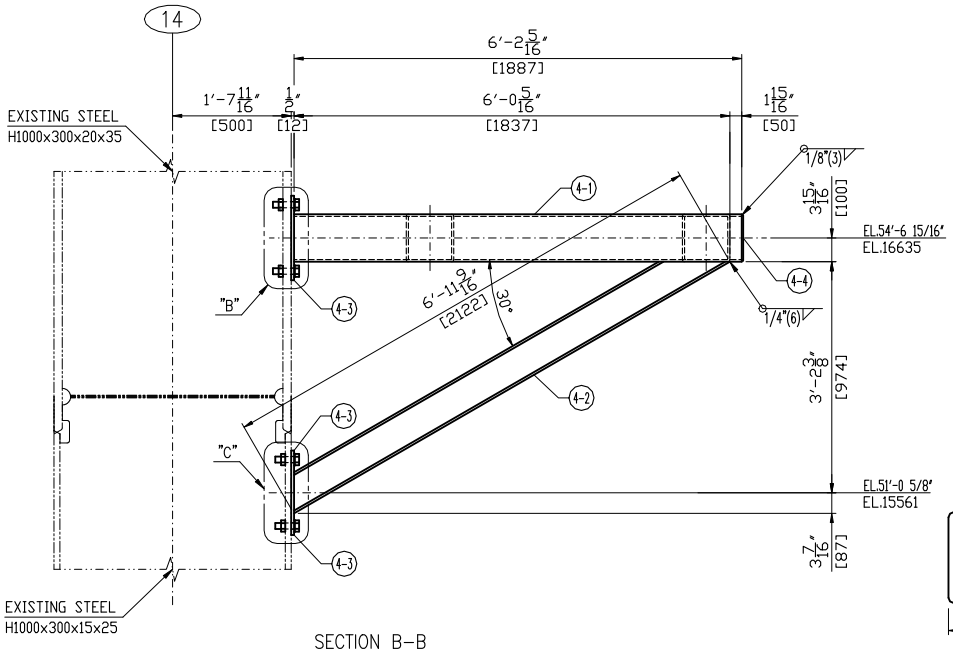

SECTION B-B
LOOKING WEST

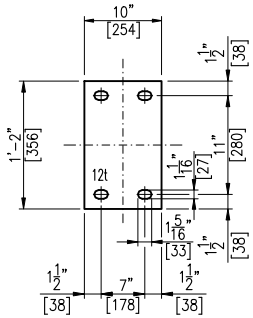

ITEM 4-3 5-3

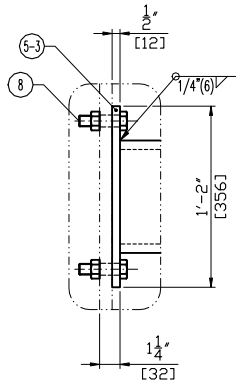

DETAIL "D"

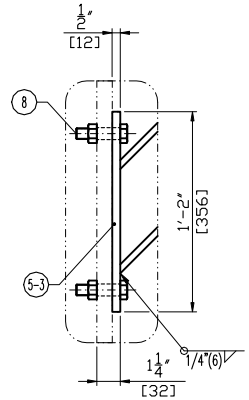

DETAIL "E"

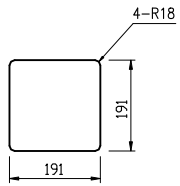

ITEM 4-4 5-4

NLR

Copyright© GE Vernova and/or its affiliates 2026
All rights reserved. The information herein is proprietary information of GE Vernova and/or its affiliates.

GE VERNOVA	Document Type: DETAIL DRAWING	Sheet Size A2
	Document Title: PIPE SUPPORT FOR CRH STEAM	
Creation Date 2026-01-21	Drawing No. 1635572-1503-PS01	Revision – / Sheet 2 OF 3

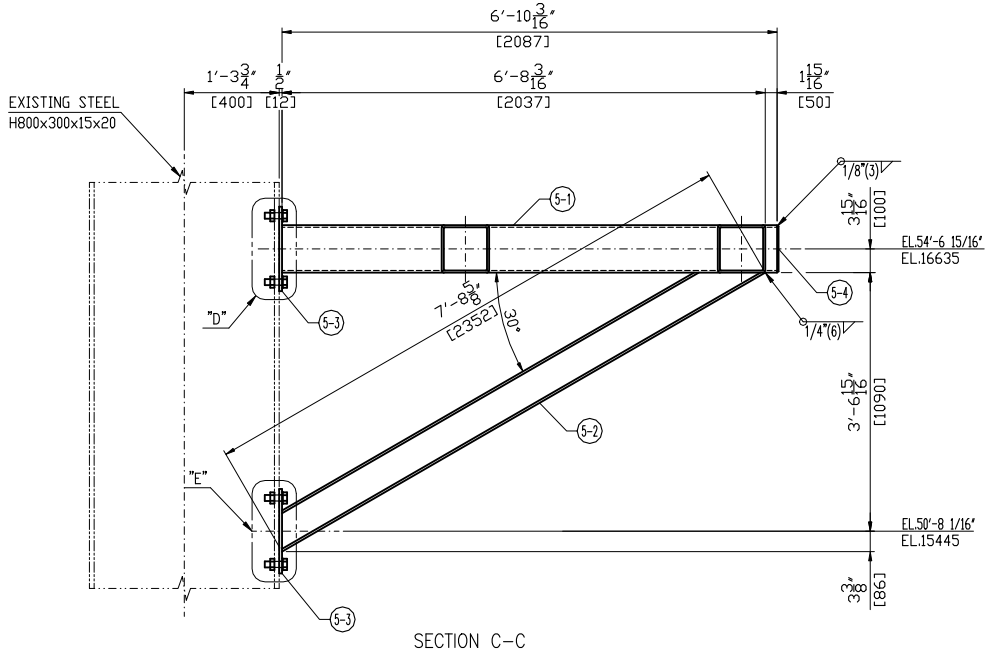

SECTION C–C
LOOKING WEST

NLR
Copyright© GE Vernova and/or its affiliates 2026
All rights reserved. The information herein is proprietary information of GE Vernova and/or its affiliates.

GE VERNOVA	Document Type: DETAIL DRAWING		Sheet Size A2
	Document Title: PIPE SUPPORT FOR CRH STEAM		
Creation Date 2026–01–21	Drawing No. 1635572–1503–PS01	Revision –	Sheet 3 OF 3